LASERMET

AUTOMATIC SLIDING DOORS
ASD-LM9

INSTRUCTION MANUAL

Issue 2

LASERMET ASD-LM9
Instruction Manual

Contents

1 Safety Warnings 3

2 Concept 4

2.1 System Components 4

2.2 Accessory Devices 5

3 General Safety Standards 5

4 Installation 6

4.1 Accessories 7

4.2 Possible Operating Modes 8

5 Wiring 11

5.1 Base System Connections 11

5.2 Control Unit 11

5.3 Accessory Device Connections 12

5.4 Optional Accessories 14

6 Start Up 17

7 DIP Switches 18

8 Functioning Tests 19

9 Power On 21

9.1 Adjustments (Trimmers) 21

10 Specifications 23

11 Warranty 24

12 Contact Details 25

1 Safety Warnings

This device is intended to be used as part of a safety system which may be used to protect personnel and equipment from possible injury, damage, or loss.

As such it must be installed and wired according to these instructions and tested by suitably qualified persons. No attempt may be made to tamper with the parts, open them, or use them outside of the parameters contained herein.

The units are only designed to be fixed to surfaces using their inbuilt fixing holes. They must not come into contact with each other or any other moving part when in use. The parts should never be subject to impact or mechanical strain.

Safety switches should never be defeated or bypassed. It is imperative that all steps are taken to ensure that any spare actuators are made unavailable, such that they cannot be used to defeat the switch or reduce the protection offered by the system in any way.

2 Concept

The automatic doors with one or two horizontal sliding wings are ideal for industrial applications, in dry areas, in covered entrance areas and foot traffic passageways.

Warning
Do not use the product for purposes other than those envisaged by the manufacturer or for any improper use.

Do not tamper with or modify the product.

The product must only be installed using approved material.

Keep unauthorised personnel away from the operating range of the device at all times.

Keep control devices in a safe place to prevent use by unauthorised people.

Lasermet provides a full range of laser interlock equipment including control systems, interlock switches, illuminated warning signs, laser shutters, door locks, external power supplies etc. which can be connected to provide a complete laser interlock system. Full support, design and installation is available from Lasermet, please contact us for any queries. Contact details are given at the end of this manual.

2.1 System Components

The Control System includes the base components illustrated in figure 1.

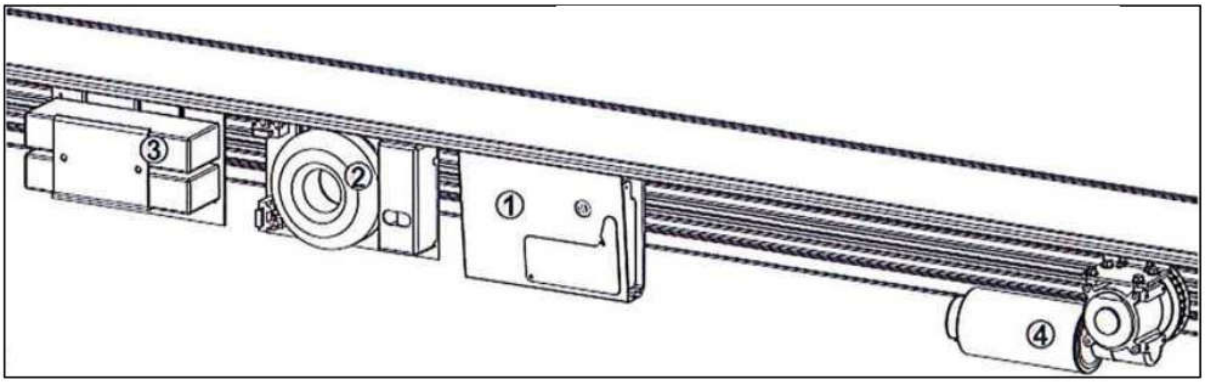

Figure 1. Control System

(1) The Control unit
(2) Power Supply unit
(3) Emergency Battery unit
(4) 24VAC Gear Motor

2.2 Accessory Devices

The ACCESSORY devices which can be installed are listed in figure 2.

Note: Correct automatic function requires the installation of the control device: Key selector.

IMPORTANT! Also consult the specific instructions supplied with each accessory.

3 General Safety Standards

Warning
Packing materials (plastic, polystyrene, etc.) must not be dispersed in the environment and must not be left where children can find them as they are a potential source of danger.

INCORRECT INSTALLATION OF THE UNIT MAY CAUSE SERIOUS DANGER. FOLLOW ALL THE INSTALLATION INSTRUCTIONS CAREFULLY.

Only professionally qualified personnel should install the product. The system should be operated in a well-lit and healthy environment, in compliance with the safety regulations in force. The use of approved protective clothing (safety shoes, protective goggles, gloves and helmet) is recommended. Do not wear articles of clothing that could get caught. Take adequate safety measures to prevent the risk of injury caused by sharp splinters and the possible risks of crushing, knocks and cuts or amputation. Work must be carried out in accordance with the relevant safety standards.

Information
Before starting the installation, check the product is intact and that the existing structure is suitably strong and stable. Also ensure it complies with current standards for the sector. The electrical system supplying power to the automation must be installed by an expert and qualified electrician, in accordance with national standards of the installation country.

Before connecting the electrical mains make sure that the data on the rating plate corresponds to the specifications of the electric mains supply.

The protective measures on the primary coil must be adopted on site.

Use a 6A differential switch-overload 30 mA as main switch.

Arrange and fasten cables with the special clamps.

Caution
The automation system can be tested and put into service when the sliding door has been verified as complying with the relevant Machinery Directive e.g. 2006/42/EC, to which the complete door, fitted and installed, is subject. The installer must use and keep the Technical manual of the automatic door and must follow all of the provisions contained in it.

At the end of the work the installer must check the installation has been carried out correctly and the automation works properly.

The risk connected to the operation of the sliding door must be assessed making sure there are no dangerous crushing or shearing points. If necessary, special preventative measures must be taken and all of the signs required by the regulations in force to warn of any dangerous zones must be attached.

Every installation must clearly indicate the ID data for the power-driven system.

The installer must provide all the information about the automatic, manual and emergency functioning of the power- driven door and deliver the corresponding instructions to the system user.

Before carrying out any maintenance or repairs or replacing any parts, whether mechanical or electrical, disconnect the mains power supply.

Only use original spare parts for any repairs or for replacing parts.

The guarantee is void if this product is used in combination with others of other brands.

The manufacturer of the drive declines any responsibility if components incompatible with safety and correct operation are installed.

Warning
In the event of any faults, disconnect the system from the mains power supply using the main switch. Do not try to repair the main unit. Contact the installer or other specialist assistance centre. Failure to follow these instructions may result in hazardous situations.

4 Installation

The entire system must be installed by qualified personnel in full compliance with the current standards in the country where the unit is installed.

Prepare the electrical connections for the system safety and control devices as illustrated in the diagram in figure 2, referring to the warnings provided in this manual. For every device installed outside the door, prepare suitable cableways (external or underground) up to the installation point.

230VAC POWER SUPPLY [115V on demand]
3 x 1.5 mm cable

(Check the cross-sectional area is suitable in relation to the length of the cable).

Prepare the mains power supply cable on the right-hand side (as seen from the inside). If it is necessary to use automation power supply cable sheathing, apply this sheathing before connecting the cable itself to the connection boxes.

IMPORTANT! Always install, upstream of the line, a mains switch that guarantees a multipole cut-off with minimum contact opening of 3mm (connect it to a 6A differential overload switch with sensitivity of 30mA).

4.1 Accessories

The command and control devices and the emergency button must be positioned within sight of the automation installation. Keep it away from moving parts and at a minimum height off the ground of 1.5m.

Read any other Accessory Device Instructions carefully before carrying out any operations.

Correct functioning of the automation system requires the installation of the control device: Key selector.

Correct use of the electric lock requires attention to the efficiency of the emergency batteries. If possible, also install the external emergency manual release SME/E (with first opening command) and/or internal emergency manual release SME/I (100% mechanical device).

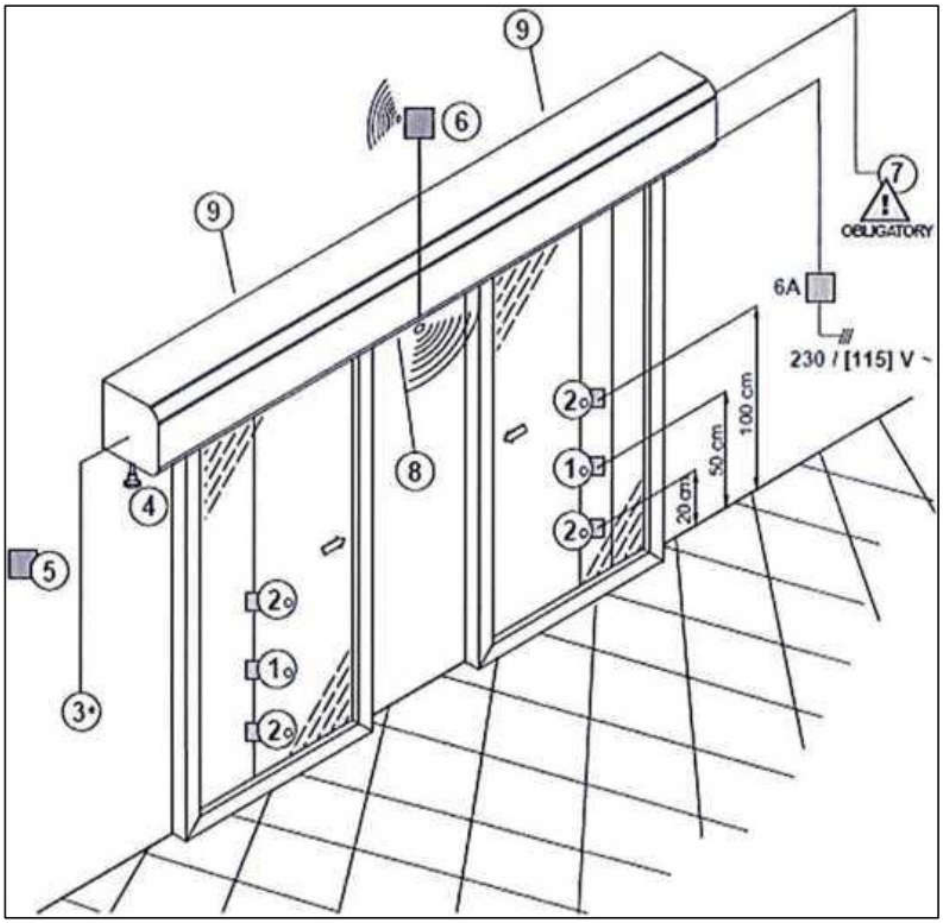

Figure 2. Accessory Devices

Table 1. Preparing the Accessories		
1	Single beam obstacle detection photocell (ER4N; ER6N)	• ER4N external • Transmitter 2x075 mm cable • Receiver 4x0.75 mm cable • Max distance between transmitter and receiver = 50m • ER6/N recessed, with amplifier card housed in beam compartment • 11 mm dia. hole - min depth 25 mm • cable suppled (0.25 mm) length 8m
2	Double beam obstacle detection photocell ER6N	• ERG'S recessed, with amplifier card housed in beam compartment • 11 mm dia. hole – min depth 25 mm • cable suppled, length 8m
3	Emergency Push-button (PE)	• Locate next to door - 2x 1 mm cable
4	Internal Emergency Manual Release SME/I	• Internal Emergency Manual Release SME/I
5	External Emergency Manual Release SME/E	• SMEE (with pushbutton for 1st opening)
6	Passage Detection Radar (RI3; RI5; DM2; DM8)	• RI3 Passive infrared radar • R15 Active infrared radar • DM2 Microwave radar • DM8 Twin microwave and infrared technology radar (movement + presence)
7	Key Selector (SC6; SC6EC) or keypad	• SC6, or SC6EC, or SC6WIRELESS with receiver • 8 x 0.22 mm cable-MAX length 15m
8	Electric Lock (EB2)	• EB2 • Cable-length 0.9 m, 1.5 m or 2.5 m
9	Mechanical Emergency Stop	• STOP device which can be combined with emergency stop: SMI, or SMS, or ER6/N

4.2 Possible Operating Modes

The operating mode required is set using the control device installed (key selector).
The control system offers the following automatic operating modes.

Automatic Mode

Automatic two-way: automatic opening of the door for inwards and outwards passages; re-closing after the wait time set (both radars are active).

Partial opening: automatic partial opening of the door for inwards and outwards passages; re-closing after the wait time set (both radars are active).

Completely closed (Night Lock option): The door is closed and kept in this position indefinitely.

Night lock option: if the electric lock is installed, the door is closed and the wing lock is inserted. The insertion of the lock is confirmed by LED DL9 ON (visible from the side) - (both radars are deactivated).

Completely open: the door is opened and kept in that position indefinitely.

Entry only: automatic opening of the door for inwards passages ONLY; re-closing after the wait time set (outwards radar not active).

Exit only: automatic opening of the door for outwards passages ONLY; re-closing after the wait time set (inwards radar not active).

Automatic Stop Operation - door stop for mechanical emergency door opener (OPTIONAL)

The STOP function device is useful for installations fitted with the mechanical emergency door opener system.

When the STOP is triggered (caused by touching of the wings), the control unit immediately stops the door in its current position and prevents any further operations while the STOP contact is triggered. To reset the contact, position the wings correctly. When the contact is reset, the automation starts to operate again in the mode set previously. If the system is in Automatic two-way mode, the door opens automatically at low speed and remains in this position; at the next radar pulse, automatic mode is restored.

Note: The STOP contact has PRIORITY in all states and over all commands and functions. DIP 11 can be used to disable the STOP contact in Night lock mode (see Settings).

Emergency Operation (OPTIONAL PE pushbutton)

A special pushbutton can be used to operate the door as required in emergency situations: total door opening or closing. The emergency operation is a low-speed operation. The type of operation (opening or closing) must always be set using DIP 9 (see Settings).

The door remains stopped in the position set until the pushbutton is released. When the emergency has passed, the set mode is restored. The reset operation is a low-speed operation.

Note: The EMERGENCY operation has PRIORITY in all operating modes and over any other command.

There is one exception: if there is a simultaneous emergency and stop, the automatic STOP operation is performed.

Master / Slave Mode (M/S)

M/S mode allows the use of two automation systems by means of electrical connections between the two units. The Interlock prevents movement of one door while the other is moving.

IMPORTANT! you must enable M/S mode on both cards using the corresponding dipswitches (see SETTINGS).

First Input Operation (OPTIONAL)

This allows the application of the FIRST INPUT when the door is closed with the Night lock (electric lock inserted). The first input involves the following: release of electric lock, if inserted; one opening operation only; re-closing after the wait time set; return to NL Night Lock state.

This function requires installation of a specific device or the external manual release can be used if it is included within the system.

Wing Contact with an Obstacle

Obstacle during opening - if the opening is slowed down or stopped by an obstacle, the door stops and the position where the collision took place is saved. During the next 3 operations, the door slows down near the collision point saved and if the obstacle remains, this point is set as the stroke end position. When the obstacle is removed, the complete opening limit is restored automatically by a low- speed movement.

Obstacle during closing - if the closing is slowed down or stopped by an obstacle, the door inverts the movement and the position where the collision took place is saved. Automatically, the door closes again, slowing down near the collision point saved to check if the obstacle remains. If the obstacle remains during the next 3 operations, the door opens and stays open. At the next radar pulse, the door closes, slowing down near the collision point saved, and this point is set as the closing position for future movements. The real closing point is restored automatically when the obstacle is removed.

Table 2. Automatic Operating Modes	
Function	Description
	Applies automatic opening for entrance and exit (entrance and exit radars both active).
Partial Opening	Applies partial automatic opening for entrance and exit (Entrance and exit radars both active).
Completely Closed (Night Lock)	Closes the door and holds it in this position (both radars NOT active). If the electric lock is installed, the door is closed and locked: NIGHT LOCK.
Completely Open	Opens the door and holds it in this position (radars and/or photocells NOT active).
Entry Only	Applies automatic opening for entrance ONLY (entrance radar active), NOT for exit (exit radar NOT active).
Exit Only	Applies automatic opening for exit ONLY (exit radar active), NOT for entrance (entrance radar NOT active).
Reset	Allows you to re-define the automation parameters by running a new learning cycle.

Note: Automatic mode requires the installation of the passage detection radars for ENTRANCE (RADAR 1) and EXIT (RADAR 2). Automatic mode also requires the obstacle photocells which invert the wing movement automatically.

5 Wiring

5.1 Base System Connections

The base system components (control unit, power supply unit, gear motor and emergency batteries)
are pre-installed on the control module and connected to each other.

If replacing any parts, apply the connections illustrated in Figs. 3-4-5.

Before powering the system, complete the installation with the accessory devices. Correct functioning of the automation system requires the installation of the control device: Key selector. When all of the connections are complete power up

the system by following the instructions in "STARTING UP"

Information
NEVER remove the unit guard. Failure to comply with this warning will render the warranty null and void!

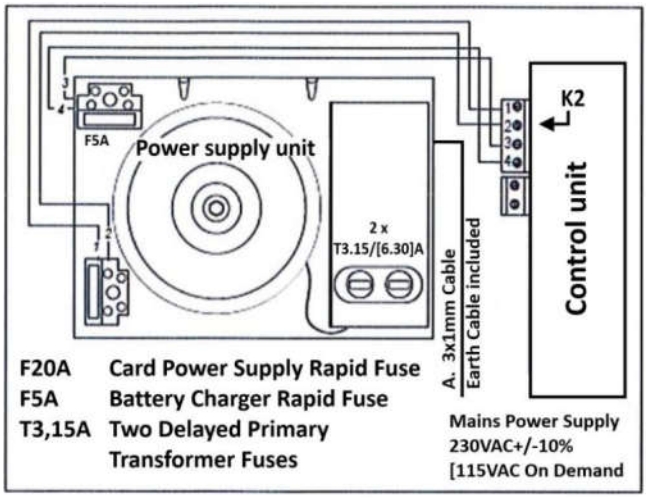

Figure 3.

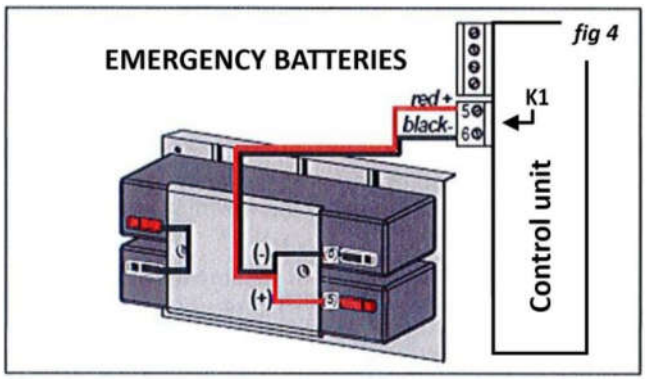

Figure 4.

5.2 Control Unit

The control unit consists of the electronic control CARD, secured to an extruded aluminium profile
which acts as SUPPORT to secure it to the Automation Module. The card is protected by a guard which has a port for accessing the programming and signal devices while the terminal boards and connectors are directly accessible at the sides (fig.6).

Warning
NEVER remove the unit guard. Failure to comply with this warning will render the warranty null and void!

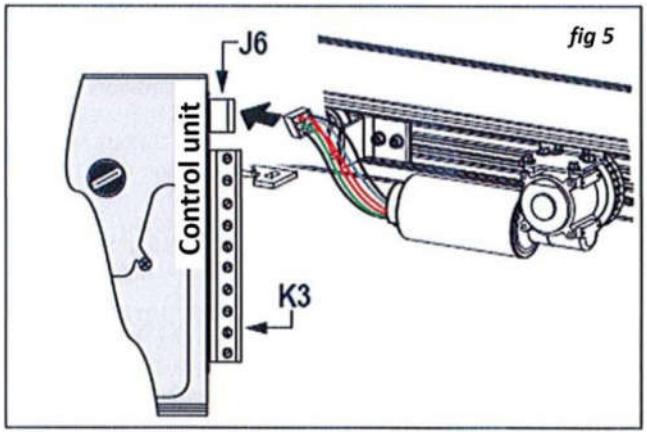

Figure 5.

5.3 Accessory Device Connections

Completion of the installation requires connection of the accessory devices used within the system. Follow the specific diagrams and instructions provided below.

Always make the connections with the power OFF.

Also disconnect the emergency batteries, if present! If a device is replaced or added after setting-up and starting the system, apply a system RESET.

Warning
All the command and control devices must be positioned within sight of the automation system, away from moving parts and at a minimum height off the ground of 1.5 m.

Key Selector (SC6-SC6EC)

1. Connect the power supply cable to the numbered Key selector terminal board, following the colours indicated in Table 3.
2. Insert the Selector connector in J7 on the CONTROL card (fig.6).

NOTE: To access the Key selector terminal board, refer to the Key selector instructions.

Table 3. Key Selector

Cable Colour	Terminal Number
Red	1
Green	2
White	3
Pink	4
Grey	5
Light Blue	6
Brown	7
Yellow	8

Control unit

K1	battery unit connector	F 1A	24V accessory fuse
K2	power supply unit connector	P1-8	Adjustment TRIMMERS
K3	accessory device connection terminal board	DP1	Programming dipswitches
J3	connector not used (optional)	DP2	reserved for factory settings
J4	multifunction keypad connector (optional)	SW1	RESET key
J6	motor and encoder connection	SW2	RADAR key
J7	key selector connector (optional)	JP1	Buzzer OFF jumper
J8*	optional input/output connector	DL2	GREEN MAINS presence LED
J9	electric lock connector (optional)	DL9	electric lock activated LED
J10**	± 24V radio receiver connector (optional)	LED	system state signal LEDs

* maintenance cycle count function output
** first input function input

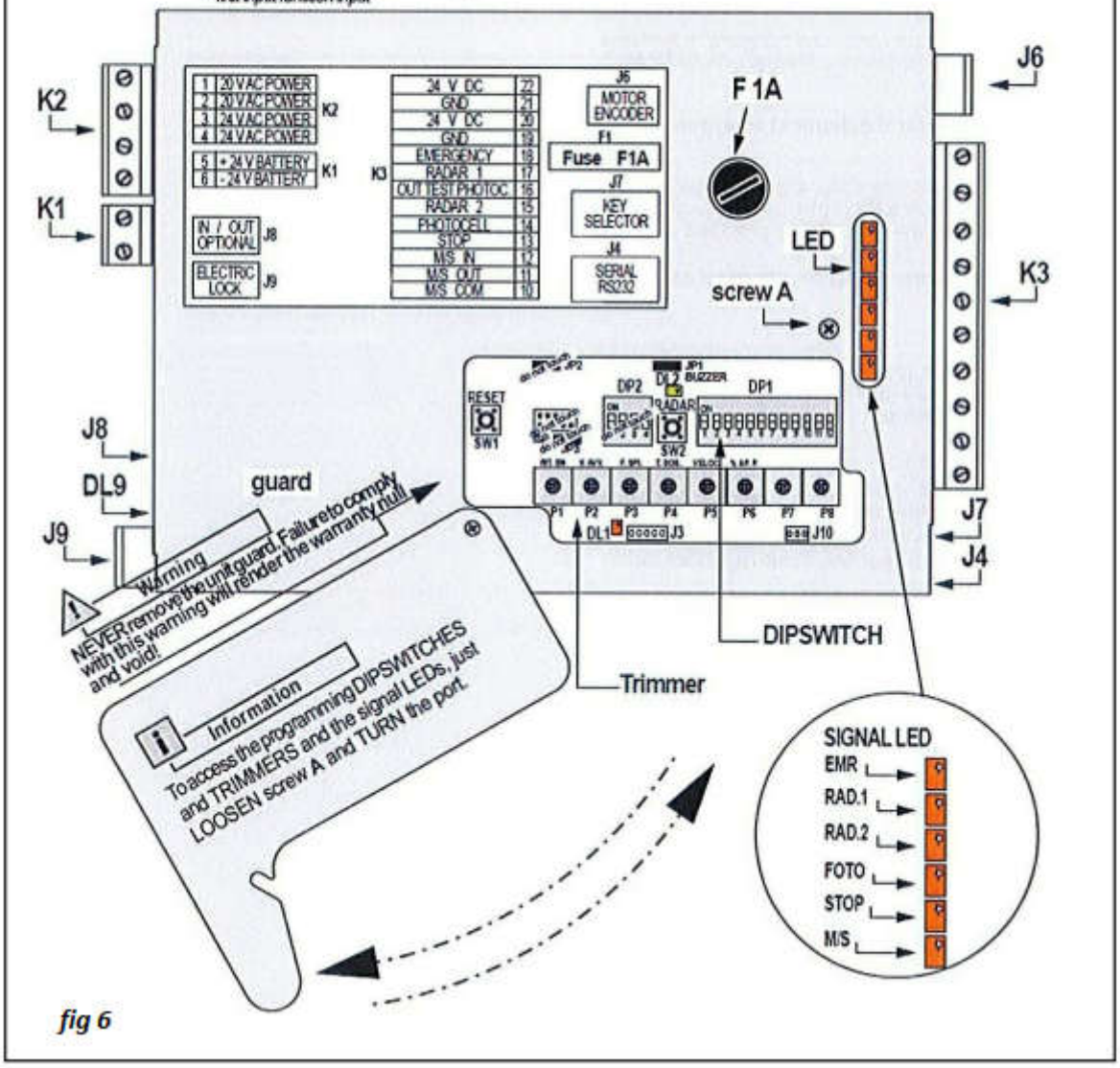

fig 6

Figure 6.

5.4 Optional Accessories

The following accessories, which may be used within the system, are connected to the card with a quick-fit connector or by using the removable terminal board K3 (13 screw-in pins).

The possible connections are illustrated in the diagram in Fig.7.

Warning
Always make the connections with the power OFF. Also disconnect the emergency batteries, if present. If a device is replaced or added after setting-up and starting the system, apply a system RESET.

Emergency (PE pushbutton)

Connect an emergency pushbutton fitted with an N.C. type contact following the diagram in fig.7. Use a turn release maintained push-button.

If not used, the emergency contact must be jumpered as it is an N.C. type contact.

Note: This command can also be applied using alarm systems (fire alarms, etc.) connected, following the instructions for each device.

Stop (door stop for mechanical emergency door opener)

Connect the STOP device fitted with N.C. type contact (SMI or SMS sensor or ER6/N photocell), following the diagram in fig.7 and the instructions provided with the device itself.

If not used, the stop contact must be jumpered as it is an N.C. type contact.

Electric Lock

Connect the electric lock to the CONTROL card using the connector J9 (fig.7), following the instructions provided with the device.

First Input Function

Connect the SME/E or a similar pushbutton/device with N.O. contact following the diagram in fig.7 and the instructions provided with the device installed.

Note: The first input function is only active in Night lock mode.

Radar

Connect the RADARS following the diagram in fig.7 and the instructions provided with the devices installed.

RADAR 1	ENTRANCE Radar
RADAR 2	EXIT Radar

Photocells: ER4N or ER6N type

Connect the ER4N or ER6N type photocells following the diagram in fig.7 and the instructions provided with the devices installed.

The photocell contact may be N.O. or N.C. depending on the corresponding dipswitch settings (see Settings). If N.C., the contact must be jumpered when not used.

Note: The ER6N photocells consist of transmitter, receiver and separate amplifier. The amplifier card, usually housed in the beam, must be connected to the unit as specified in fig.7.

Master / Slave (M/S) Function

Connect the two automation units in Interlock mode following the diagram in fig.7.

IMPORTANT! M/S mode on both cards must be enabled using the corresponding dipswitches (see Settings).

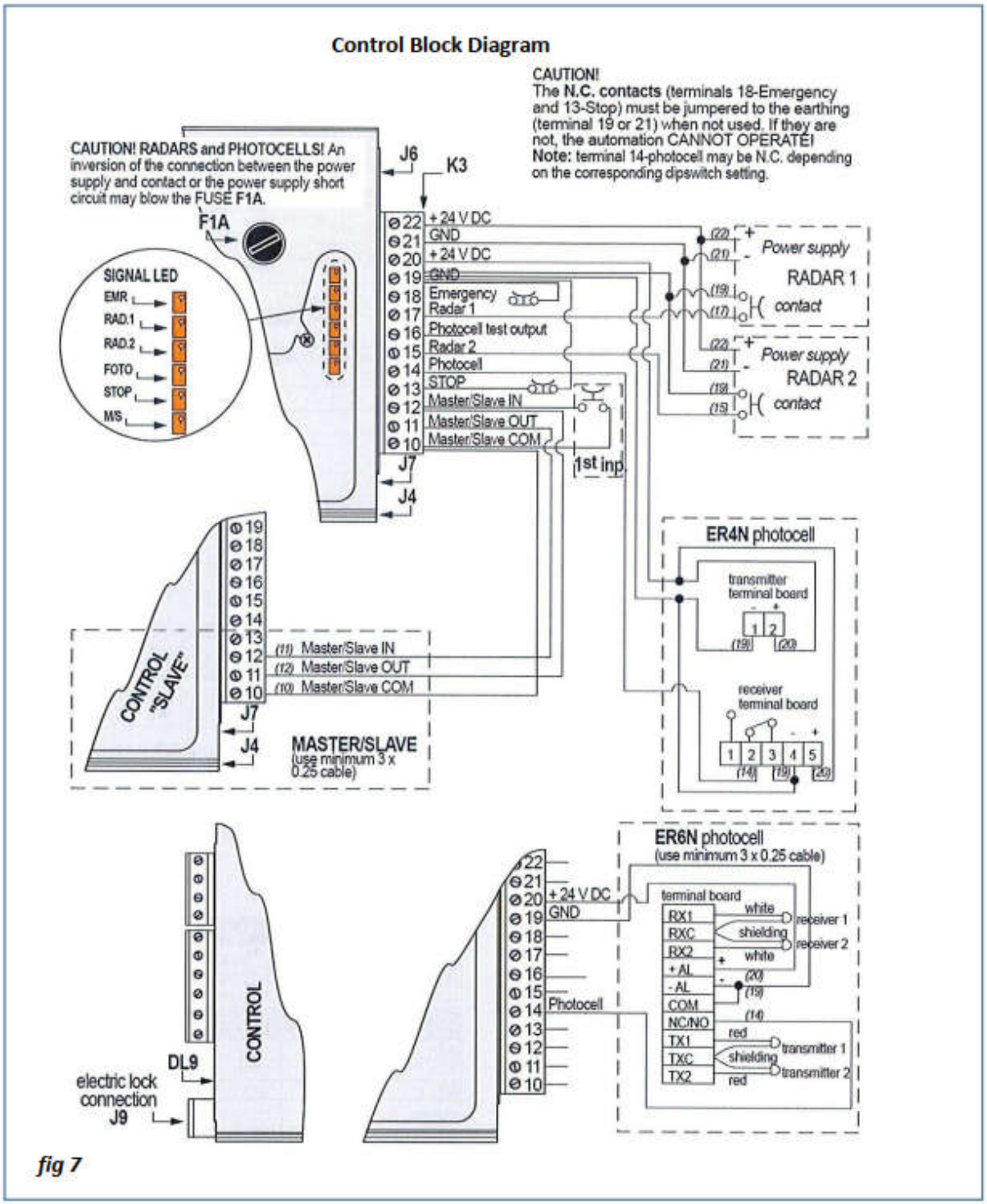
Control Block Diagram
CAUTION!
The N.C. contacts (terminals 18-Emergency and 13-Stop) must be jumpered to the earthing (terminal 19 or 21) when not used. If they are not, the automation CANNOT OPERATE!
Note: terminal 14-photocell may be N.C. depending on the corresponding dipswitch setting.
CAUTION! RADARS and PHOTOCELLS! An inversion of the connection between the power supply and contact or the power supply short circuit may blow the FUSE F1A.
J6
K3
F1A
SIGNAL LED
EMR
RAD.1
RAD.2
FOTO
STOP
M/S
22 + 24 V DC
21 GND
20 + 24 V DC
19 GND
18 Emergency
17 Radar 1
16 Photocell test output
15 Radar 2
14 Photocell
13 STOP
12 Master/Slave IN
11 Master/Slave OUT
10 Master/Slave COM
J7
J4
1st inp.
Power supply
RADAR 1
contact
Power supply
RADAR 2
contact
ER4N photocell
transmitter terminal board
receiver terminal board
CONTROL "SLAVE"
(11) Master/Slave IN
(12) Master/Slave OUT
(10) Master/Slave COM
MASTER/SLAVE
(use minimum 3 x 0.25 cable)
ER6N photocell
(use minimum 3 x 0.25 cable)
terminal board
RX1
RXC
RX2
+ AL
- AL
COM
NC/NO
TX1
TXC
TX2
white
shielding
white
red
shielding
red
receiver 1
receiver 2
transmitter 1
transmitter 2
+ 24 V DC
GND
Photocell
CONTROL
DL9
electric lock connection
J9
fig 7

Figure 7.

6 Start Up

Once the electrical connections have been completed and checked, before powering the system, make the DIPSWITCH SETTINGS for DIPSWITCH unit DP1 as described below.

Warning
NEVER TOUCH THE DP2 UNIT DIPSWITCHES.
Failure to comply with this warning will render the warranty null and void! This operation is strictly reserved for factory settings. Touching the DP2 Unit Dipswitches could damage the system and/or components.

Table 4. DIP Switch Settings	
1 Partial Opening	When traffic is considerable, it is established if the partial opening remains as set using the trimmer P6 or is adapted (it increases automatically as the traffic increases and vice versa).
2 Break-in	If there is a break-in attempt, it is established if the automation is free (the gear motor is not triggered) or resistant (the motor prevents wing opening).
3 M / S	Master/Slave mode is enabled or disabled when two automations are connected to each other.
4 Closing Speed	Adjusts the closing speed value as a percentage of the opening speed (also see Trimmer P5).
5 Photocell	To set the type of contact used for the obstacle detection photocells: NO or NC.
6 Continuation during power failure	If the mains power fails, continuation of the mode set is enabled or disabled (using the emergency batteries). If continuation is disabled, when there is a power failure, the operation set using DIP7 is carried out immediately.
7 Last operation during power failure	if the mains power fails, this establishes the operation for the automation to perform using the emergency batteries: opening or closing. The door stops in this position until the power returns. **Note:** Dipswitches 6 and 7 are connected: if continuation is enabled, the last operation is only carried out when the batteries reach the critical voltage threshold; if not, the last operation is carried out when the power fails. **Note:** When the power returns, the automation starts to operate again in the mode set previously.
8 Exit only electric lock	Enables or disables the lock for every closing operation when the automation is in automatic EXIT ONLY mode.
9 Emergency	Establishes the operation which the automation performs if the emergency button is pressed: opening or closing (the door stops in this position). **Note:** When the PE emergency pushbutton is released, the automation starts to operate again in the mode set previously.
10 N.L. mode power failure	Establishes electric lock maintained or OFF if there is a power failure when the door is set to Night lock mode.
11 N.L. mode stop	Enables or disables the Stop with mechanical emergency when the door is set to Night lock mode.
12 Not used	

7 DIP Switches

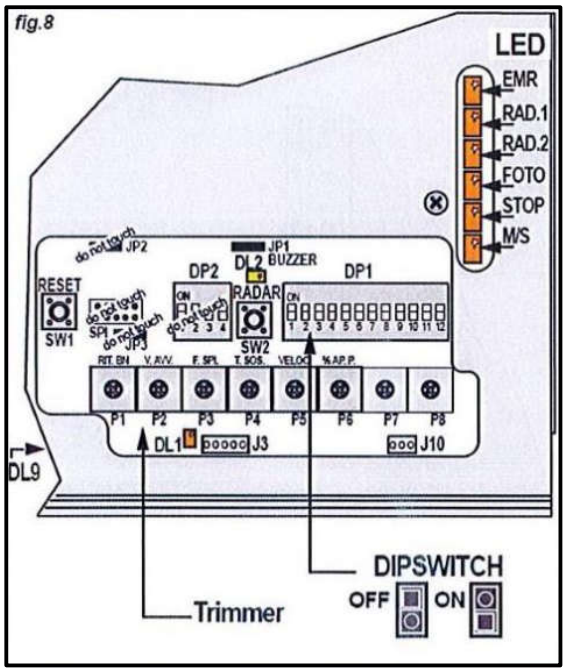

Figure 8.

Table 5	
LED	Function
DL1	Diagnostics and alarms
DL2 (green)	Mains power supply presence
DL9 (visible on J9 connector side)	Lock inserted
Accessory devices connected to terminal board K3 as per diagram Fig. 7	
EMR	Emergency Pushbutton
Rad 1	Entrance radar
Rad 2	Exit radar
FOTO	Photocell
STOP	Stop Pushbutton
M / S	Master / Slave Mode

Table 6		
Group DP1 DIP Switches	Settings	
	Position 0 (OFF)	Position 1 (ON)
1 Partial Opening	Fixed	Adaptive
2 Break-in	Free	Resists
3 Master-Slave	M/S enabled	M/S disabled
4 Closing Speed	75% opening speed	Equal to opening speed*
5 Photocell	N.O.	N.C.
6 Continuation during power failure	Enabled	Disabled
7 Last operation during power failure	Closes	Opens
8 Exit only electric lock	Disabled	Enabled for every closing op.
9 Emergency	Closes	Opens
10 N.L. mode power failure	Releases the door	Maintains lock
11 N.L. mode STOP input	STOP disabled	STOP enabled
12 Not Active		
* self-learned / set with trimmer P5		

8 Functioning Tests

At the end of the adjustment procedure, you must check that the automation is operating correctly.

Check the behaviour of the complete system after connecting, when the power returns or after a reset by running at least 3 complete operating (opening/closing) cycles. This fine tunes the system.

If there are any problems, see Error conditions.

System Reset (SELF-LEARNING)

You can apply a RESET using the RESET key on the unit or using the key selector installed (see the instructions enclosed with the control device installed).

The RESET procedure re-runs the self-learning procedure for the automation operating parameters:

- thrust force required
- wing weight
- stroke span
- opening/closing speed
- approach speed and braking distance
- presence/absence of the optional Electric lock and Emergency battery devices.

IMPORTANT: if the self-learning Is interrupted, apply a RESET. Note: during the self-learning, the settings and adjustments are ignored.

LED Signals

Table 5 and Fig. 8 illustrate the LEDs on the card.

Note: LED DL1 (ON) is associated to the buzzer signals emitted by the unit.

Buzzer Signals

Table 7 illustrates the buzzer signals associated to the STATES/ERRORS detected by the system.

Note: The buzzer signals are associated to LED DL1 (ON). IMPORTANT: the buzzer may be disabled by disconnecting jumper JP1.

Warning
Before replacing any parts, disconnect the power. If the emergency batteries are present, disconnect these too!

Application of the Reset procedure is confirmed by a continuous buzzer beep followed by alternating beeping until the self-learning procedure is completed.

The self-learning procedure stages are as follows:

a. *electric lock presence test (if the electric lock is installed, it is enabled and the lock is disengaged)*
b. *complete door opening*
c. *repetition of the electric lock presence test*
d. *complete door closing*
e. *partial door opening*
f. *complete door closing and door stopping in this position*

Table 7	
Signal (pause: 1 sec.)	Corresponding Alarm Condition
No beeps	No alarm
1 beep	Self-learning in progress
4 beeps	Short circuit
5 beeps	Encoder faulty
Signal (pause: 5 secs.)	Corresponding Warning
No beeps	No warning
1 beep	Self-learning failed
2 beeps	No mains power
3 beeps	Low battery level with mains power present
4 beeps	Critically low battery level with mains power present
5 beeps	Low battery level with mains power not present
6 beeps	Battery running out
7 beeps	Electric lock prevented from locking the door

Pay attention to both the number of beeps in sequence and the interval between the beeps, as the two signal groups have a different pause time between one beep sequence and the next: 1 sec. for ALARMS and 5 secs, for WARNINGS.

If there are simultaneous signals, the system gives priority to the ALARM signal. If there are simultaneous signals from the same signal group, the system gives priority to the more serious one.

Note the seriousness of the signal is expressed by the number of buzzer beeps in sequence e.g. 1 beep = minimum seriousness, 5 beeps = MAX seriousness.

9 Power On

1. When you first start the system, make sure that nobody is near the automatic door.
2. Check the external devices connected and check the state of the LEDs.
3. Always check the settings and adjustments on the basis of the configuration of your system and operating requirements.
4. Check the factory settings.
5. When you have carried out all the required checks, power the system for start-up, connecting the mains power supply first and then the emergency batteries, if present.
6. At POWER-UP, the automation runs the self-learning procedure for the operating parameters.
7. Note: at Power-up, the unit emits 3 “beeps” alongside 3 DL1 LED flashes; the self-learning procedure involves cyclical “beeping.”
8. Check that the procedure is run correctly (as described in Reset) until it ends with the door stopped in the CLOSED position.
9. Run a few complete door operation cycles. This helps the system to complete the operating set-up procedure automatically.
10. Only if you have specific operating requirements is it necessary to make further adjustments using the TRIMMERS (see Adjustments).

9.1 Adjustments (Trimmers)

The operating adjustments are applied using the TRIMMERS and are also saved and maintained if there is a power failure or a Reset.

Table 8 illustrates the possible adjustments.

Note: Any adjustments applied while the door is moving are learned at the end of the cycle and applied at the next operation.

P1 adjusts the time between the electric lock activation command and the insertion of the lock.

P2 further adjusts the self-learned approach speed value. P3 further adjusts the value of the self-learned thrust force and, therefore, the limit beyond which an obstacle is recognised.

Warning
If you Increase the thrust force value, you increase the obstacle detection threshold which opposes the movement of the door!

P4 sets the time for which the door remains open before closing again automatically.

P5 further adjusts the self-learned opening speed value.

Warning
Be extremely careful when adjusting P5. Apply the adjustments gradually and check the adjustments regularly to make sure there is no knocking against the limit switch at the end of the stroke!

Note: The closing speed can be adjusted in terms of the opening speed (DIP4).

P6 adjusts the partial wing opening, as a percentage of complete opening.

P7 and P8 are not used.

All the trimmers are set about halfway during the factory settings.

Do NOT change these positions before power-up. After the self-learning procedure and after a few complete door runs, you can adjust the trimmers for system fine tuning for your specific requirements.

Table 8

Trimmer	Adjustment	Values
P1 RIT.BN	Night lock delay time	0 secs 90 secs
P2 V.AVV.	Opening and closing approach speed (% of self-learned speed)	- 2% + 2%
P3 F.SPI.	Thrust force (torque adjustment using current control)	min. max.
P4 T.SOS	Opening pause time	0 secs 45 secs
P5 V.AP.	Opening speed	min. max.
P6 %AP.P.	Partial opening (% of wing opening)	10% 99%
P7 X.XX.	Disabled	Disabled
P8 X.XX.	Disabled	Disabled

10 Specifications

Supply Voltage	230V (+/- 10%) 115V on demand
External Device Voltage	24V
Card Protection	20A rapid fuse for card power supply Short-circuit electronic threshold 45A
Power Supply Unit Protections	Two 3.15/ [6.3] A delayed network fuses
Accessory Power Supply Protection	One 1A Rapid Fuse
Temperature Range	-20 to +70 °C
Emergency Batteries	Two 12V - 2Ah - Maintenance-Free Batteries
Battery-Charger	Built into CONTROL Card
Automatic Diagnostics	Buzzer signals
Serial Comms Port	RS 232
Opening Speed Adjustment	11-75 cm/s (1 wing) 22-150cm/s (2wings)
Closing Speed Adjustment	DIP SWITCH at 50% 11-50 cm/s (1 wing) 22-100cm/s (2wings) DIP SWITCH al 100% 11 -75 cm/s (1 wing) 22-150cm/s (2wings)
Approach Speed	Self-learned (approx. 6 cm/s)
Inversion Sensitivity	Adjustable
Door Opening Time	0 - 45 secs, (continuously adjustable)

Trimmer-Adjustable Parameters

- Electric lock activation delay
- Opening and closing approach speed
- Thrust force (torque adjustment using current Control)
- Open door pause time
- Opening speed
- Partial wing opening percentage

Dip-Switch Adjustable Parameters

- Fixed or adaptive partial opening. Break-in response ON/OFF
- Master/slave mode ON/OFF
- Closing speed (as percentage of opening speed)
- Photocell contact type
- Emergency operation (opening or closing)
- Electric lock "exit only' mode ON/OFF

Settings during power failure:
Continuation or application of the last operation (using Emergency batteries).

Settings if emergency batteries reach critical threshold during power failure:
Last operation (opening or closing), Electric Lock maintained, Electric lock OFF

Dimensions are approximate. Values given as 'typical' are average values measured across a number of samples and are not guaranteed. Lasermet reserve the right to alter any specification without prior notice.

11 Warranty

Lasermet provide a 12-month warranty for defects in materials and manufacture, from the date of installation or delivery. Installations completed by Lasermet are covered against defects in workmanship for 12 months.

Damage or defects caused by other factors are not covered. For example, industrial contamination, incorrect cleaning, storm damage. Consequential loss is not covered under warranty. Compensation for indirect or direct loss or damage is expressly excluded. Rectification of the defects or a replacement does not initiate a new warranty period.

For all deliveries, payments and other legal transactions, English law takes precedence for any litigation.

12 Contact Details

Lasermet provide a full range of laser interlock equipment including interlock switches, illuminated warning signs, laser shutters, entry keypads with built-in fail-safe override timer, door locks, external power supplies etc. which can be interconnected to provide a complete system. We also supply equipment and consultancy covering all aspects of laser safety. Full support, design, and installation is available from Lasermet, please contact us for any queries.

For sales and technical support:

Lasermet Ltd.
Lasermet House,
137 Hankinson Road,
Bournemouth
BH9 1HR
United Kingdom.

Tel: +44 (0) 1202 770740
Fax: +44 (0) 1202 770730

Email: sales@lasermet.com
Website: www.lasermet.com

Lasermet Inc.
10N Martingale Road, Suite 400,
Schaumburg, Illinois 60173
United States.

Tel: 847 466 1475

Email: usa@lasermet.com
Website: www.lasermet.com